FOR REFERENCE ONLY

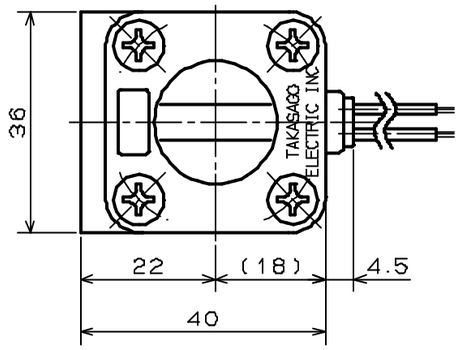

PINCH VALVE

SPECIFICATIONS for MODEL NP-0305-NC

TUBE DIAMETER	: I.D. 3mm O.D. 5mm
TUBE MATERIAL	: SILICONE
OPERATING PRESSURE RANGE	: 0 ~ 50kPa
AMBIENT TEMPERATURE RANGE	: 0 ~ 40℃
RATED VOLTAGE	: 12VDC、24VDC、90VDC 100VAC 200VAC(SILICON RECTIFIER ATTACHED)
POWER CONSUMPTION	: 10W
DUTY CYCLE	: CONTINUOUS
COIL TEMPERATURE INCREASE	: MAX. 90℃ FROM ROOM TEMPERATURE
INSULATION CLASS	: CLASS B
DIELECTRIC STRENGTH	: 1500VAC FOR 60s

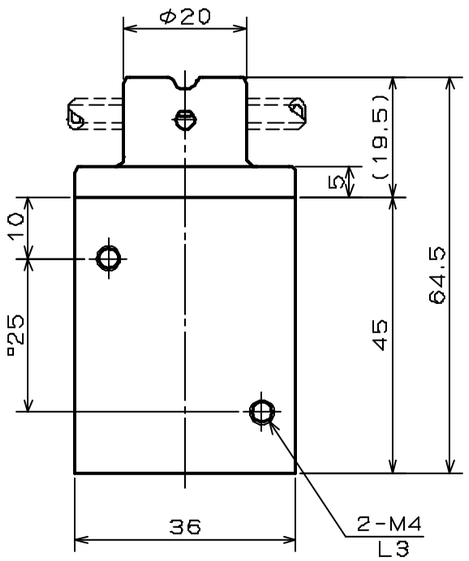

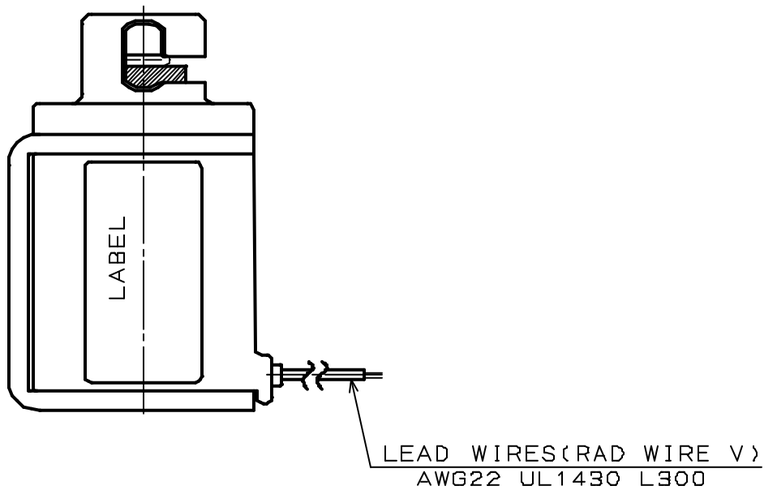

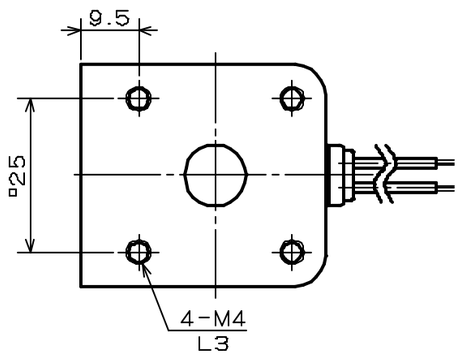

PART NAME	MATERIAL	REQD.	NOTE
PINCH VALVE			
NP-0305-NC			

TAKASAGO ELECTRIC INC MIDORIKU. NAGOYA. JAPAN